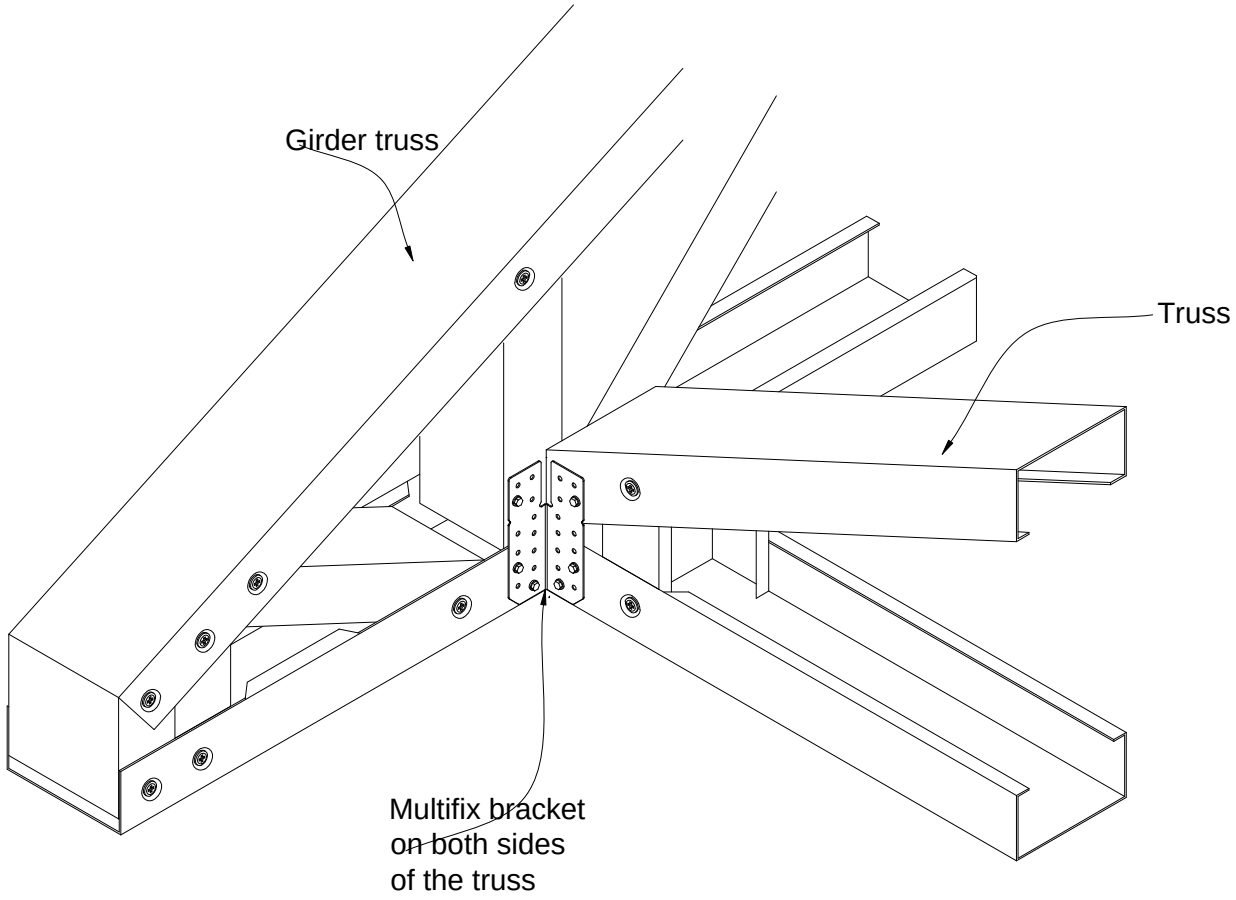

Note: Consult with Engineer
for each connection

Truss to Girder Truss Connection with Multifix Bracket

FRAMECAD	JOB DETAILS	INDEX	REVISION
	Roof Framing Details: Truss to Girder Truss Connection with Multifix Bracket	FC-R12	0