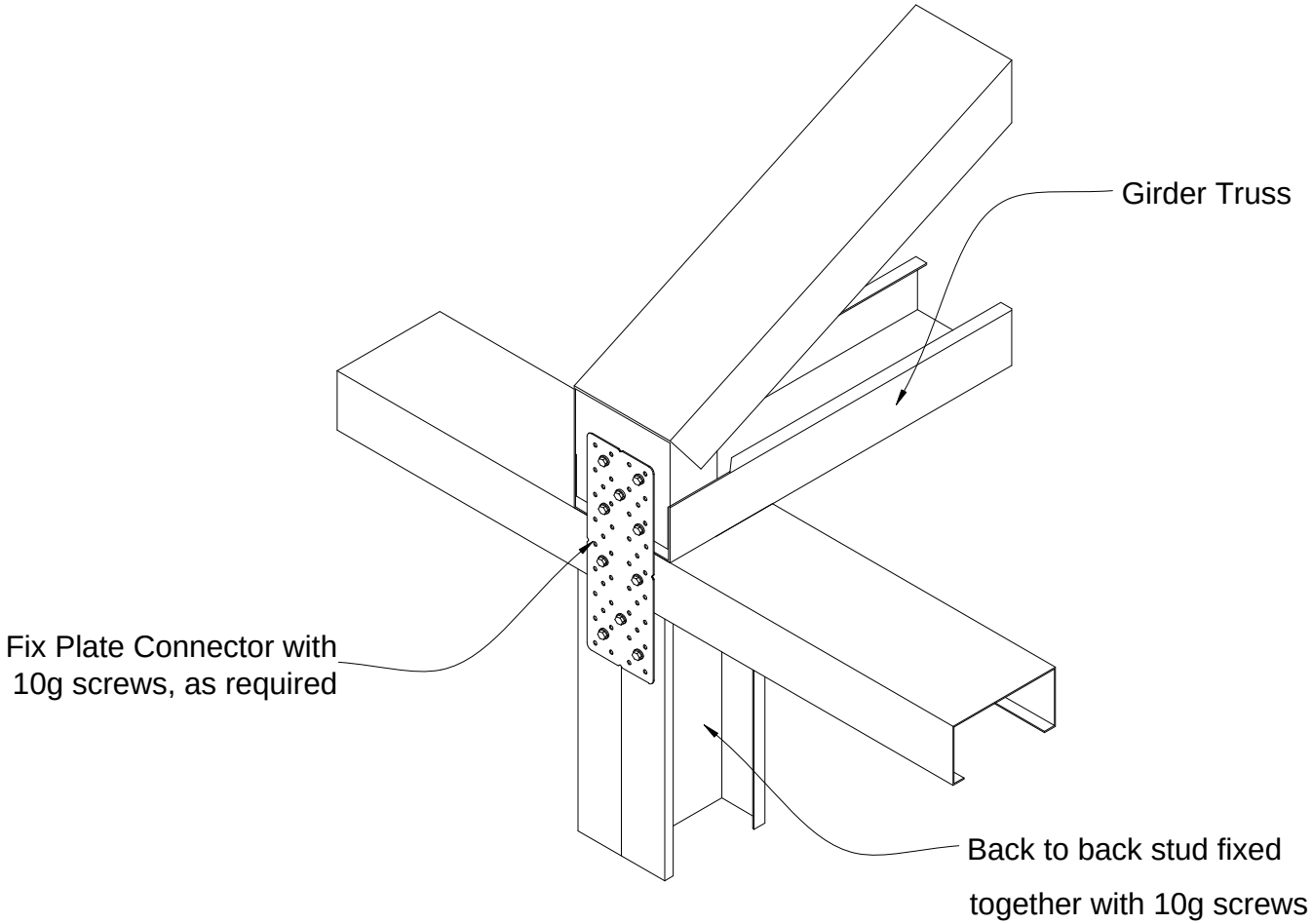

Note: Consult with Engineer
for each connection

Girder Truss to Wall Connection

FRAMECAD	JOB DETAILS	INDEX	REVISION
	Roof Framing Details: Girder Truss to Wall Connection	FC-R10	0